1. Identification

A: IDENTIFICATION

1. IDENTIFICATION NUMBER & LABEL LOCATIONS

The V.I.N. (Vehicle Identification Numbers) is used to classify the vehicle.

- **POSITIONING OF THE PLATE LABEL FOR IDENTIFICATION**

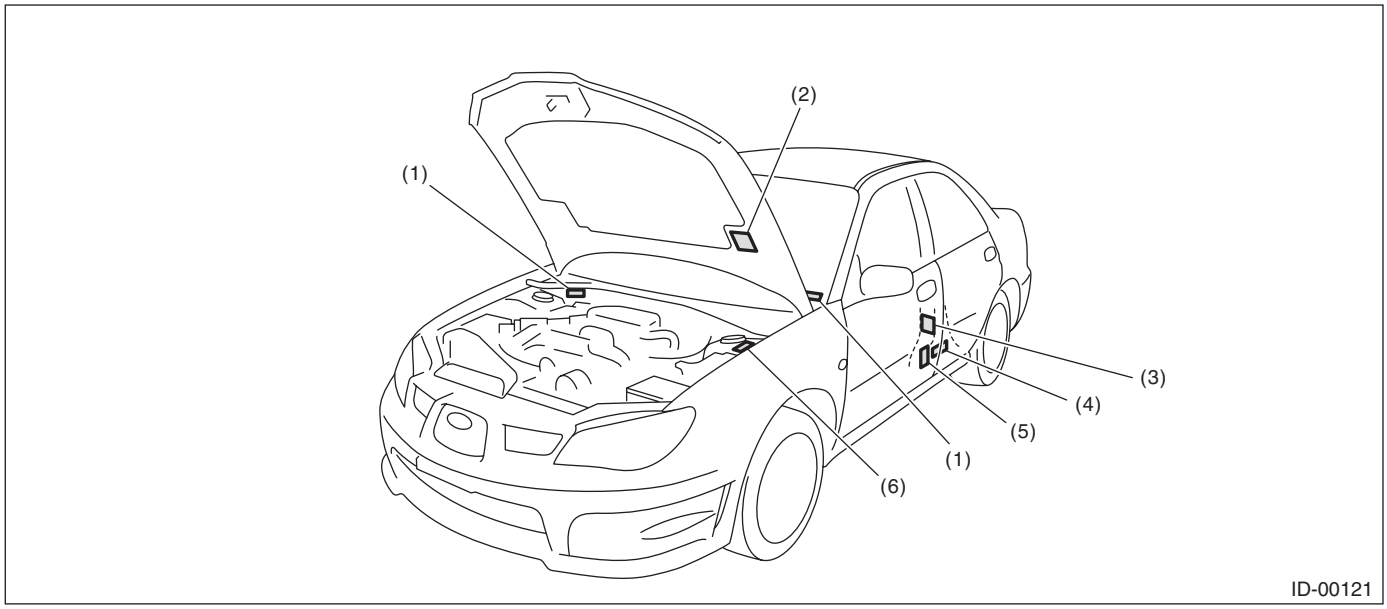

(1) Vehicle identification number (V.I.N.)
(2) Emission control label
(3) Tire inflation pressure label
(4) Approval plate
(5) Barcode label (USA model)
(6) Model number plate

- **ENGINE**

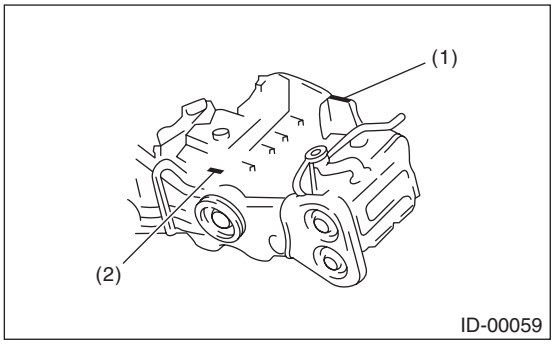

(1) Engine serial number
(2) Engine type (crankcase upper side)

- **AUTOMATIC TRANSMISSION**

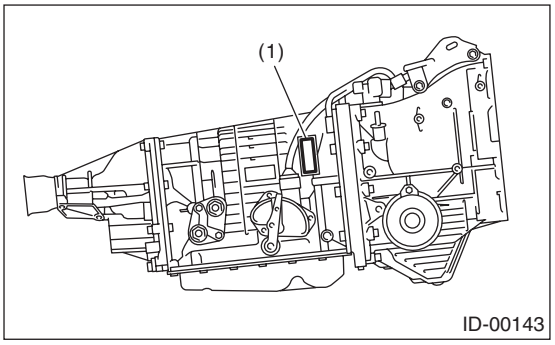

(1) AT type label

- **MANUAL TRANSMISSION (5MT)**

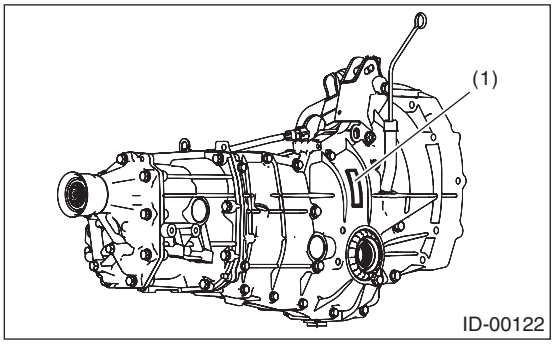

(1) MT type label

- **REAR DIFFERENTIAL**

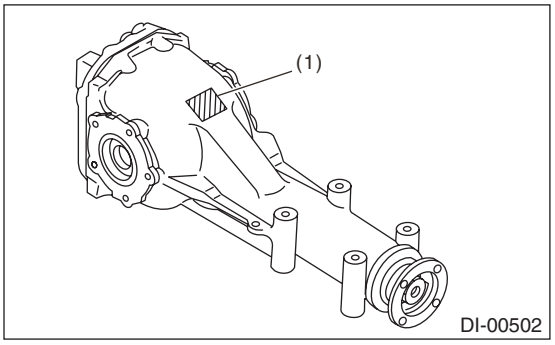

(1) Type (white paint)

- **MANUAL TRANSMISSION (6MT)**

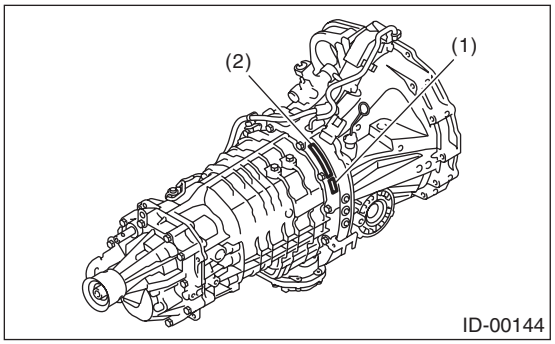

(1) Transmission serial No.
(2) MT type label

- **MODEL NUMBER PLATE**

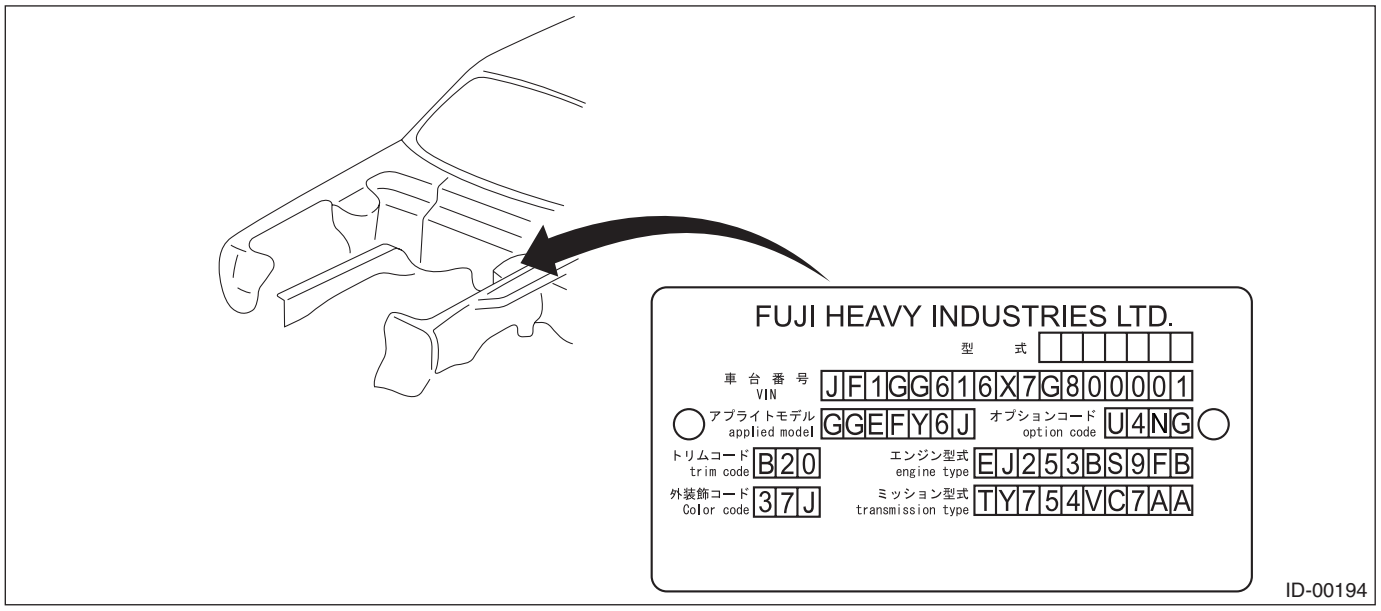

2. MEANING OF V.I.N.

The meaning of the V.I.N. is as follows:
]JF1GG616X7G800001[
The large parentheses (][) located in front and back are stop marks.

Digits	Code	Meaning	Details
1 — 3	JF1	Manufacturer body area	JF1: Passenger car, FHI made
4	G	Car line	IMPREZA
5	G	Body type	D: 4 door sedan G: Wagon
6	6	Displacement	6: 2.5 L AWD 7: 2.5 L AWD turbo
7	1	Grade	1: 2.5 i 2: OUTBACK 3: OUTBACK-SE 4: WRX 5: WRX-TR 6: STI 7: STI LIMITED
8	6	Restraint	6: Manual belts, dual airbag, side airbag
9	X	Check digit	0 — 9&X
10	7	Model year	7: 2007MY 8: 2008MY 9: 2009MY
11	G	Transmission type	G: Full-time AWD 5MT Single range H: Full-time AWD 4 Speed AT L: Full-time AWD 6MT Single range
12 — 17	800001	Serial number	From 500001: 4 door sedan From 800001: Wagon

3. MODEL NUMBER PLATE

The model number plate indicates: the applied model, the option code, the trim code, the engine type, the transmission type, and the exterior color code. This information is helpful when placing orders for parts.
GGEFY6J

Digits	Code	Meaning	Details
1	G	Series	IMPREZA
2	G	Body type	D: 4 door sedan G: Wagon
3	E	Engine displacement Drive system Suspension system	E: 2.5 L AWD F: 2.5 L AWD High power turbo G: 2.5 L AWD turbo
4	F	Model year	F: 2007MY
5	Y	Destination	Y: U.S., Canada
6	6	Grade	6: 2.5 i 7: OUTBACK 8: WRX 9: WRX-TR B: OUTBACK-SE E: STI H: STI-B
7	J	Transmission, fuel feed system	R: SOHC MFI 4AT P: DOHC B MFI 4AT J: SOHC MFI 5MT AWD D: DOHC B MFI 5MT AWD H: DOHC B MFI 6MT AWD

The engine and transmission type are as follows.

Engine

EJ253BS9FB

Digits	Code	Meaning	Details
1 and 2	EJ	Engine type	EJ: 4 cylinder
3 and 4	25	Displacement	25: 2.5 L
5	3	Fuel feed system	3: MFI-NA(SOHC) 5: MFI turbo 7: MFI High power turbo
6	B	Exhaust regulations	B: U.S. (FED, CAL)
7	S	Transmission	E: 5MT G: 6MT P: AT S: 5MT
8	9	Minor change	9: 9 is stamped on the vehicle.
9 — 10	FB	Detailed specifications	Used when ordering parts. See the parts catalog for details.

Transmission

TY754VC7AA

Digits	Code	Meaning	Details	
1	T	Transmission	T: Transmission	
2	Y	Transmission type	Y: Full-time AWD MT center differential V: Full-time AWD AT center differential Z: Full-time AWD AT MP-T	
3 and 4	75	Classification	75: 5MT 85: 6MT 1B: AT (direct control method)	
5	4	Series	MT	4: 5MT 6: 6MT
			AT	4: AT
6	V	Transmission specifications	V: Full-time AWD 5MT single range with viscous coupling center differential W: Full-time AWD 6MT single range L: Full-time AWD with MP-T 4AT (direct control method) M: Full-time AWD with VTD 4AT (direct control method)	
7	C	Engine type	C: 925 SOHC W: 925 DOHC turbo	
8 — 10	7AA	Detailed specifications	Used when ordering parts. See the parts catalog for details.	

Rear differential

EG

Code	Reduction gear ratio	LSD
EG	3.900	None
EH	4.111	None
ER	3.700	Viscous
P1	3.900	Viscous
HR	3.545	Torsen

Option code

U4NG

Digits	Code	Meaning	Details
1 — 2	U4	Destination	U4: U.S. (FED, CAL) CO: Canada
3 — 4	NG	Main optional parts of the vehicle	—

RECOMMENDED MATERIALS

RM

Page
1. Recommended Materials 2